6â *,È2 'è& ¬2 7¤2 +¦, 3+Ñ ÿÅ* 7+, 7+ð 7+37 48Ô& *,$ /ª1 ,9
75là1* 7+37 +¦, $1

Thời gian làm bài 90 phút;
(50 câu trắc nghiệm)

0m ÿÅ WKL

(Thí sinh không ñược sử dụng tài liệu)

+Ñ WrQ WKt VLQK 6Õ EiR GDQK

&kX &KR ÿ× WKyï KjxP FVyÕÿ× WKÏ WUrQ > @ QKm KuQK YWÁUÏ%QLÇX V
QK©W"

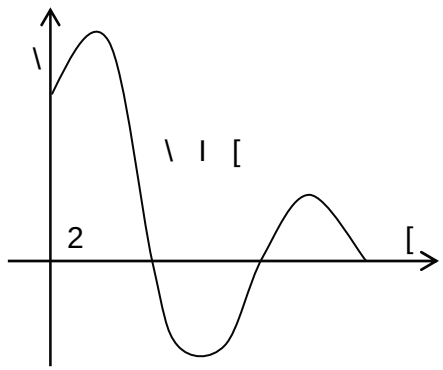

$ $\int_0^3 f(x)dx$ % $\int_2^6 f(x)dx$ & $\int_0^2 f(x)dx$ ' $\int_0^6 f(x)dx$

&kX 0ËQK ÿÅ QjR VDX ÿk\ ÿ~QJ"

$ 1ÃX Oj ÿLÇP FõF WUÏ FëDxKjOPj VQÕK\LËP [FëVDkSuK mkQJ WUuQK

% *Li WUÏ FõF ÿ¥L FëD KjP VÕ OX{Q PORÕ KkQ JLi WUÏ FõF WLÇX F

& 1ÃX x YJ x z WKu KjP VÕ ÿ¥W FõF WUÏ W¥L

' 1ÃX x WKu KfjPx VÕÿ¥W FõFx ÿ¥L W¥L

&kX &KRaz x! y ! NK!·QJ ÿÏQK QYjDRL VDX ÿk\

$ $OR\sqrt{Jx} - {}_a\otimes RJ$ % $OR\sqrt{Jx} - {}_a\otimes RJ$

& $OR_a xJy \quad {}_a xOR_a Jy \quad ORJ$ ' $OR_a xJ^D \quad D \quad {}_a\otimes RJ$

&kX &KR O QJ WBUÁ BÿCQJFy ÿi\ $%& Oj WDP JLiF YX{Qa√W¥PL»W% $%
SK·QAJBC KçS YßL P»W ÿi\ $%&7tPÝKWWJKyÇ WtFK NKÕL O QJ WUé

$ $\frac{\sqrt{a}}{}$ % $\frac{a\sqrt{}}{}$ & $\frac{\sqrt{a}}{}$ ' $\frac{a\sqrt{}}{}$

&kX 1JKLËP FëD SKšmkQJOÿWUuQK

$ x % x & x ' x

&kX 7URQJ NK{QJ JLDQ YßL KË WUéF WR¥D ÿxÝ y2[mz] FKR YKjDL P
E x ny z ÇD VRQJ VERQJKu JLi WUÏ FëD P Yj Q O«Q OmçW Oj

$ Yj $ % Yj $ & Yj $ ' Yj $

Å WKL 7U

Tuyensinh247.com

&kX &KR ÿ× WKÏ x & YjA C 7umP ÿÇ ÿmáQJ WK·[QJ F³W ÿ× WKÏ
x m
W¥L ÿLÇPBSDkVQDELFËKWABVDÍ OjiFuQK WKRL

A. m ***B.*** m – ***C.*** m ***D.*** m KRm» F

&kX 6Õ ÿmáQJ WLËP F±QyFë D ÿ× WOKjÏ KjP VÕ
x x [

$ % & '

&kX &KR D E Oj FiF VÕ WK-ôF WK-ÓD0ËPQ ÿÅ QjR VDX ÿk\ ÿ~QJ"
S S

$ $\int_a^b 3\,dx$ FRxV bFRVa FRV % $\int_a^b 3\,dx$ FRxV WDQ bWDQ

& $\int_a^b 3\,dx$ FRxV aFRVb FRV ' $\int_a^b 3\,dx$ FRxV WDQ aWDQ

&kX &iF QJKLËP FëDzSKmkQVUWQUuWQ±S VÕ SKíF Oj
$ Yj % L ±L & Yj L ' L Yj ±L

&kX &KR FiF VÕ SKíF|z|] WKÓ%DLÃRWQUµQJ W±S KçS FiF ÿLÇP ELÇ
Z iz iOj PÝW ÿmáQJ WUzQ 7tQK EiQ NtQK U FëD ÿmáQJ WUzQ ÿ
$ r %r & r ' r

&kX 0ÝW WjX OñD ÿDQJ FK¥\ YßL Y±Q WSÕKDQKP WïWKKuáLQJmçP ÿÿL
ÿÝQJ FK±P G«Q ÿÅX YßL Yt±P WÕ7URQJ ÿNKR§QJ WKáL JLDQ WtQK
O~F E³W ÿ«X ÿ¥S SKDQK +ÓL WKáL JJLDQP NtKVLKVkjX EÿDRÿmQçKFLrTXJnLQk
WjX GïQJ K·Q"
$ V % V & V ' V

&kX × WKÏ KÿjP VÕ x x Fy KDL ÿLÇP FõF WUÏ QµP WUrQ ÿmáQJ
x
y ax b NKla ÿby EµQJ"
$ % & '

&kX 7URQJ NK{QJ JLDQ xyzßLFKKËKVDÍLD YÿHÝFWR mm 7umP ÿÇ
u v a Aa o ¼ Yaß L
$ m %m & m ' m

&kX 7uP W©W F§ FiF JmiÿÇUKjÿëVDÕWKDPQVÕÏFK ELÃQ W§UrQ NKR§Q
FRV FRVm ©

$ $\int_{-1}^{a} m\,d$ « m t % $\int_{-1}^{a} m\,d$ « m t & m ! ' m

&kX 7±S QJKLËP FëD E©WJSKOxRJQJ WOUjuQK

$ S – § © ·¹ % S – § © & S ·¹ « – a ¬ · 1 ' S – § © f ·¹

&kX %LFÃxW 3 dx FL Q [NKL ÿy
$ F x xF R V % F x x F R & V F x x F R V F x xF R V

Tuyensinh247.com

&kX ¥R KjP FëDf KkjPx^x VÕ EµQJ

$ f x x^x %f x x^x x O Q

& f x x^x x x O f x x^x xQ O Q

&kX *Li WUÏ OßQ QKy©W F ëD WUKrjP>ÿRÕ¥Q x m / x

$ m % m & m ' m

&kX &KR WtFK S ¨kdsQ .sinxdx . 1Ã X tÿ»FWR VWKu WD Fy

$ I ¨t²dt (π, 0) % I ¨t²dt (1, 1) & I ¨t²dt (π, 0) ' I ¨t²dt (1, 1)

&kX 7KÇ WtFK FëD NKÕL rWUé YFyFëiLQÅhXtEDKRÿi\

$ Scm % cm & Scm ' Scm

&kX .t KLHËXOj KuQK SK·QJ JLßL K¥Q√EXQL\ÿ×YWKÏ KjPtQYÕFWRÇ WtF
NKÕL WUzQ [RD\ WKXHÿm[ÇFQJNKTLXDQ&RWKUéFK

$ V S O Q %V S O Q& V S OQ ' V SOQ

&kX &KR NKÕL FKyS.ABCÍDJFLyiFABÅXOj KuQK YX{QJ F¥QK FP &¥QK
PÝW JyF EµQKJÇ WtFKëDFPNKÕL FKyS ÿy Oj

$ √ % √ & √ ' √

&kX × WKÏ FëD KjP VÕ QjR GmßL ÿk\ NK{QJ Fy WLËP F±Q QJDQJ"

$ y x/x %y x/x & y x/x ' y /x

&kX 0ÝW WKFÑyD KÿuQK G¥QJ QKm KuQK YÁ SK«Q ÿ©PÝWWW3DFJXEYRHD
a m b mc m 1JmáL WD WU×QJ KRD K×QJ WUrQ SKE{QJÿ©jW W{
SK«Q WDP JLiF J¥FK FKpR WU×QJ KRD1Ã×FJLÿßLPÛPL±WFkÿÝKRDEK{QQ
ÿ{QJ Fk\ Yj KRD F~F Oj ÿ×QJ FkGWËKu WÕFKWLÅÇQWWUrQQJKRD WU

$ ÿ×QJ % ÿ×QJ & ÿ×QJ ' ÿ×QJ

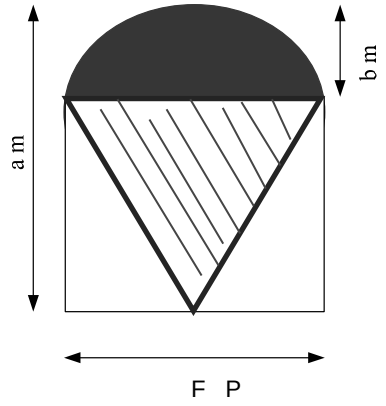

&kX %iF 7KDQK Fy FiL DmR FÇ QLËLQ FWtFKé YïD TXD EiFFRQ{Lj YßL P
WKX ÿmçF W©Q F§ WKjQK SK-P 7QKRENEQWKQ©JKFLÍFWnQSXQLKFP Fyé
PÛL FRQ Fi WKjQK SK-P WKX ÿmçF WSQJ§WKRXPD EDNRJQKLYXFWQ§Fi
ÿmçF WÙQJ Q QJ VX©W FDR QK©W" i*WSUQÕKNQXQLJ Fy KDR KéW WU

$ FRQ % FRQ & FRQ ' FRQ

Tuyensinh247.com

&kX &KfRx 7tQK PWUrQJ f f f

$ 3 % 3 & 3 ' 3

&kX &KR VÕz SKiíF 7tQK P{ÿXQ FwëD VÕ SKíF

$ % & '

&kX +jP VÕ QjR GmßL ÿk\ ÿ×QJ ELÃQ WUrQ 5"

$ y ORxJ x %y & y ORxJ ' y

&kX +uQK YÁ ã ErQ Oj ÿ× WKÏ FëD KjP VÕ QjR"

$ y x x

%y x x

& y x x

' y x x

&kX Gọi z và z là hai nghiệm phức của phương trình

z z . Biểu thức A |z| |z| có giá trị bằng

A. . **B.** . **C.** . **D.** .

&kX &KR FiF VÕ WKÏ FaLZ mkjQJRJ! .K·QJ ÿÏQK QjRÿ¥QJ ÿk\ Oj

$ ab % b a & ab ' ba

&kX .KÕL KÝS FABC' QK±CD Fy ÿÝ GjL FiF F¥QK a« QJ KÇmçWFKOjNKÕL ABC' ABCD Oj

$ V a %V a & V a ' V a

&kX 0ÝW KuQK WÍ aLËQ PÅW F¥QK WU•QJ YßL ÿÍQK FëD KuQK Qy ÿmáQJ WUzQ ÿi\ FëD KuQK QyQ .KLQÿk QyQOjWtFK [XQJ TXDQK Fë

$ – Sa % – Sa & Sa ' – Sa

&kX 6Õ SKiW ELÇX ÿy~QJ YxÅ KjP VÕ

+jP VÕ ÿm FKR [ixF•RÿÏQK YßL PÑL

+jP VÕ ÿm FKR Oj KjP VÕ FK¹Q

+jP VÕ ÿm FKR Fy ÿ¥R KjP F©S Yj

× WKÏ KjP VÕ ÿm FKR Oj PÝW SDUDERO

*LßLOKyPQ f OxLP f

$ % & '

&kX &KR KuQK SABCKFyS ÿi\ Oj WDP JLiF A, BC ÿ¥QJ FKQ WSEQj WDP JLiF ÿÅX Yj QµP WURQJ P»W SK·QJ YaX {QKÇJ WFtFKÕL NÿÕL 7tQXSQ¥R WLÃ

$ Sa % Sa & Sa ' Sa

Tuyensinh247.com

&kX 7URQJ NK{QJ JLDQ [illegible] c 3d YßL
a b c ÿLz TXD KNDL ÿLÇP Yj FiFKA ÿLÇP PÝW NKR§QJ OßQ
.KL ÿy JLi WUH EL Ç X EWµKQíJF
D b
c G

$ % & – '

&kX &KR P»W F«X Y6j EFiyQ WNtPQ K0»W SK·QJ 3 F³W P»W F«X WKHR
WUzQ & Fy F7tXQ KYLNKRdSQVJ WiyKÃQ P»W SK·QJ 3

$ d √ %d √ & d √ ' d √

&kX &KR ÿmáQ'JÿWKT·XQDJ ÿLÇP 0 Yj Fyà YHFWk FKÍ SKmkQJ
3KmkQJ WUuQK WKDP 'VÕjFëD ÿmáQJ WK·QJ

$ -x t ®y t ¯z t % -x t ®y t ¯z t & -x t ®y t ¯z t ' -x t ®y t ¯z t

&kX &³W EÓ KuQK TX¥W WUzQ $2% Wï PÝQK F§QK LFGFQWK QJ KuQK t
2% FëD KuQK TX¥W WUzQ FzQ O¥L YG¥LQJ KÐX PÝ WmKçuFQ RÝQWyQ iL*ÑLK
FëD TX¥W WUzQ G•QJ SOjPuSKJÉX WUÐ OWKÇQWkFWK FkÕL QyQ

$ √ SR % — SR & √ SR ' √ SR

Tuyensinh247.com

&kX &KR KjP VÕ Fy ÿ¥RfKXjPOLrQ WéF WUrQ 5 Yjf ÿ× WKÏ FëD KjP V
WUrQ ÿR¥Q > @ Fy ÿ× WKÏ QKm KuWQKRYÁJ EFiQ N7KuPQJNKÏQK ÿVÏDXK j

$ PDf[x f
> @
% PDf[x f
> @
& PDf[x f
> @
' PDf[x f
> @

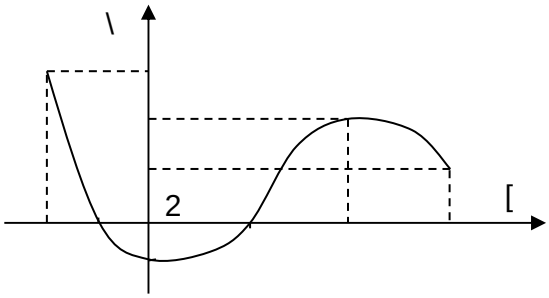

&kX 0»W F«X 6 Fy WKYPj WLÃS [~F YßXL P»W SK·QSJKm3kQJ WUuQK C

$ x y z % x y z

& x y z ' x y z

&kX 7uP PËQK WKÅRQJ FiF PËQK ÿÅ VDX

$ 6Õ SKíF] D EL FybP{ÿXQ Oj

% 6Õ SKíF] D EL ÿmçF ELÇX GLÉQ KEµQJ SÿKíÇFP20\D E WURQJ

& 6Õ SKíF] Dœ EL

' 6Õ SKíF] D EL Fy VÕ SKíF ÿÕL]¶ D ± EL

&kX &KyS 6$%&AFAJBC 6$ D 7DP JLiAB $BC& aFy JyABC

.KR§QJ FiFK Wï $ ÿÃQ P»W SK·QJ 6%& EµQJ

$ % & '

&kX 7URQJ NK{QJ JLDQ 2[NFQFKLM Wí GLËQ P YjQ *RF

JLóD KDL ÿmáQJ WK·QJ 01 Yj 34 Fy VÕ ÿR EµQJ

$ % & '

&kX 7URQJ NK{QJ JLDQOxyzLFKLE WÑD ÿÝ 2[\ ÿmáQJ WK·QJ Yj

d t t R •.ÃW OX±Q Ju YÅ YÏ WUt WmkQJ ÿÕL FëD KDL ÿmáQJ

$ .K{QJ YX{QJ JyF Yj NK{QJ %&WWQ KDX QKmQJ NK{QJ YX{QJ JyF

& 9X{QJ JyF QKmQJ NK{QJ F³W ÿQKD³X QKDX YïD YX{QJ JyF

&kX 7URQJ KË WÑD ÿÝ 2[\] FKR KDL ÿLÇP 03 WKD\1ÿÙL TXD»W SK

WUéF 2[2\ O«Q OmçW W¥L $ D ÿkYjÿ%QJE +Ë WKíF QjR VDX

$ ab a b % a b & a b ab ab a b

&kX &iF ORjL Fk\ [DQK WURQJ TXi WUuQKçQJ TXDQ KÓ KFDSF EÁQQK±QP ÝW

FëD FDFERQ .KL PÝW EÝ SK±Q FëDKPLÊQ WmçFQJ TXRQ ÿ KçSFKÊQ

NK{QJ QK±Q WKrP FDFERQ QóD /mçQÁJ SFKKFQERQ\ PÝFW DFiEÝK SFK±

FKX\ÇQ KyD WKjQK 1LWkPt O¼LÃÕ SUK«QJ WQÃXP JÑLFERQ FzQ O¥L

PÝW FiL Fk\ VLtQK PWWuãQPt ÿmçWFKWtQK WRHR F{QJ WKíF

3KkQ WtFK PÝW P¯X JÛ Wï F{QJ WUuQKçQJ NLÃQ FEWRQ~F FFÙzQQJ

JÛ ÿy Oj +m\ WtQK QLrQ ÿ¥L FëD F{QJ WUuQK NLÃQ WU~F ÿy

$ Q P % Q P & Q P ' Q P

&kX 7tQK ÿ¥R KjP FëD KjP VÕ

$ y OQ %y O &Qy x ' y

&kX 7URQJ P»W SK·QJ WÑD ÿÝ 2[\ JÑL F Oj ÿiL±Ç1P OEjLÿÇLXÇ BLÉLQÇ XKG

FKR VÕz SKíFz 7tQK GLËQ WtFK WDP JLiF 201

$ S'OMN — % S'OMN — & S'OMN — ' S'OMN —

Tuyensinh247.com

Thei gian làm bài:90 phút;
(50 câu tr7c nghiOm)

0mjÅW

(Thí sinh không jÿ c su dmg tài liOu)

ÑQWVQK ÕRQK

RX jõQÏFQFÐÿWÕ $y \frac{\sqrt{x}}{x\ [}$ Oj

$ % & '

RX R a x y! NÐÿQRVDÿX VDL

$ ORJ x y ORJ a xORJ a y % ORJ $\sqrt{x}$ −ORJ x

& ORJ x^{D} DORJ x ' ORJ $\sqrt{a}$ x −ORJ x

RX RQOQÿQJ ABC A B C Fy ÿ DPIFÿQÿ % a√ PW

SQJ A BC ÿ ÿ FÿQÿNÕQÿW

$ $\frac{\sqrt{a}}{}$ % $\frac{a\sqrt{}}{}$ $\frac{\sqrt{a}}{}$ ' $\frac{a\sqrt{}}{}$

&

RX ÿFÐSkkQÿWQK ^{x} − Oj

$ x % x x ' x

&

RX ÿPPÐQÿX VDÿWQJFiFPÐQÿXDX

$ ÕKF]DE œ ® $\frac{-a}{b}$

% ÕKF]DEyPÿQOj $\sqrt{a\ \ b}$

& ÕKF]DE ÿ0DÿWQJPÿV QSKF

' ÕKF]DEyVÕKF]DE

RX RDÐFiFVÿÿPmQ a $\frac{S}{}$ b $\frac{S}{}$ 0ÐÿQRVDÿQJ

$ $\int_a^b \frac{3}{FRVx}dx$ FRV FRV % $\int_a^b \frac{3}{FRVx}dx$ VQa VQb

& $\int_a^b \frac{3}{FRVx}dx$ FRV FRV ' $\int_a^b \frac{3}{FRVx}dx$ VQb VQa

RX ÕKÿQRVÕ y x x x Oj

PVõFR[FÐÿRÑ x • R

PVõFROÿRVÕQ

PVõFRFyÿRFSÿ f

ÿWõFROPÿVDDRO

Q OP y x f $_{x\phi}$ OP y x f $_{\phi\ x}$

$ % & '

RX ÕW F x 3 V dxQF [NÿX

$ F x FxR V % F x FxR V & F x FxR V ' F x FxR V

Tuyensinh247.com

$ % & '

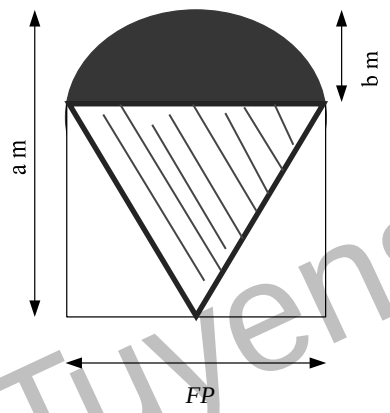

$ % & '

$ % & '

$ % & '

Tuyensinh247.com

v t t PVE RQ y t OJ NRQ EQ IQ QL NW
OF SK QÉ QN JÇ FT XQ JnQ P tK QÉ RQ KV RÉ F
JÇ Q"

$ V % V & V ' V

RX RÉ W \ $\frac{x}{x\ m}$ Y A C ÜP mJ QJ (d) \ F W
JÇ SK QÉ W B , DVDRFR W F ABCDOJ QK L

A. m RF m **B.** m **C.** m **D.** m –

RX RÉ W F K Q I $\cos^2 x.\sin x dx$. t K F y
0

$ I $\int_0^{\pi} t^2 dt$ I $\int_1^{\pi} t^2 dt$ I $\int_0^{\pi} t^2 dt$ I $\int_1^{1} t^2 dt$

RX Ò y f x F y R f x O L W 5 K R VÕ f x W Q
JÇ Q y K K Q Ú P N Q J Q W Q F iF N Q J K DX

$ PD[f x f
> @

% PD[f x f
> @

& PD[f x f
> @

' PD[f x f
> @

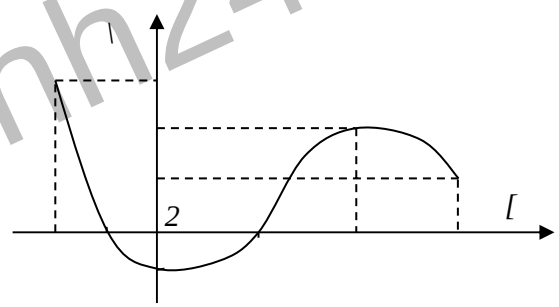

RX Ò W Q K D R VÕ y $\frac{x\ m}{x}$ W Q R Q > (Oj

$ m % m & $\frac{m}{}$ ' $\frac{m}{}$

RX % F Q K y F i D R F y É W F K m Q F i 9 T X H F Q R Ý FRQ m Y
JÇ Q F K R R N Q É Q F iF D Pu Q F W K F RQ m W
PÊ RQ F iJ K F Q P N 9 F S É D R Q É R Q F iÕ J W
JÇ V Q Y D R Q É N Q F y É R Q T X iW Q É K
$ FRQ % FRQ & FRQ ' FRQ

RX F Q N Q J D Q É Ý Oxyz F K M F W $\vec{u}$ $\vec{v}$ m m m Ç
$\vec{u}\ \vec{v}$ ¬ A $\vec{a}$ º ¼ $\vec{a}$

m % m & m ' m

RX F iF V Ã k Q J a b É a z Y ORJ b ! . É J K R V D É O j É J
a a b a b a a a b a b a
$ « ¬ a b % « ¬ a b & « ¬ a b ' « ¬ a b

RX É D R VÕ R G N Q F y É F Q D Q J

$ y $\frac{x}{x}$ % y $\frac{x}{x}$ & y $\frac{x}{x}$ ' y $\frac{}{x}$

Tuyensinh247.com

[illegible] x y z [illegible]

$ x y z % x y z

& x y z ' x y z

[illegible] y $\frac{x \quad x}{x}$ [illegible]

y ax b [illegible] a b [illegible]

$ % & '

[illegible]

[illegible] z $\frac{i}{}$ z [illegible]

$ S, OMN — % S, OMN — & S, OMN — ' S, OMN —

[illegible]

$ y x x

% y x x

& y x x

' y x x

[illegible] y $\frac{FRVx}{FRVx \quad m}$

[illegible] $\frac{S§}{©}$.

$ $\frac{a \quad m \quad d}{m \quad t}$ % m & $\frac{a m \quad d}{m \quad t}$ ' m !

[illegible] OxyzFRPSQ3 D[by c] d [illegible] a b c z

[illegible] M N [illegible] A [illegible]

[illegible] F $\frac{D \quad b}{c \quad G}$ [illegible]

$ % & — '

[illegible]

$ y ORJ x x % y ORJ x & y ^{x} ' y $\frac{}{x}$

[illegible] y $\sqrt{OQ}$ [illegible] V [illegible]

[illegible] Ox

$ V S O Q % V S OQ & V S OQ ' V S O Q

[illegible] f x $\frac{x}{x}$ [illegible] P f $\frac{§}{©}$ f $\frac{.}{1}$ f $\frac{§}{©}$ f $\frac{.}{1}$ $\frac{§}{©}$ $\frac{.}{1}$

$ 3 % 3 —— & 3 —— ' 3

[illegible] MNPQ [illegible] M N P [illegible] Q [illegible]

$ % &

[illegible] r cm [illegible] h cm Oj

$ Scm % Scm & Scm ' cm

Tuyensinh247.com

S.ABC A, BC = a 0 SAB S.ABC

$ $\frac{Sa\sqrt{\ }}{}$ % $\frac{Sa\sqrt{\ }}{}$ & $\frac{Sa}{}$ ' $\frac{Sa}{}$

y f x

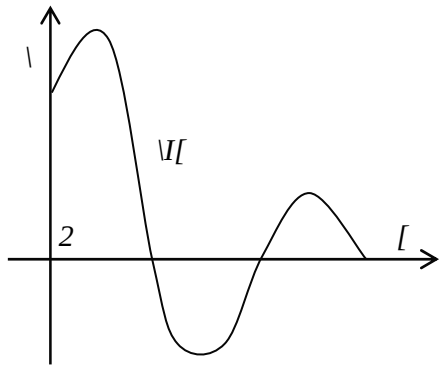

$ $\int_0^3 f(x)dx$ % $\int_0^6 f(x)dx$ & $\int_0^2 f(x)dx$ ' $\int_2^6 f(x)dx$

z i w $\frac{\bar{z}\quad i}{z}$

$ $\sqrt{\ }$ % & $\sqrt{\ }$ '

$\vec{a}$

$\begin{cases} x \quad t \\ y \quad t \\ z \quad t \end{cases}$ % $\begin{cases} x \quad t \\ y \quad t \\ z \quad t \end{cases}$ & $\begin{cases} x \quad t \\ y \quad t \\ z \quad t \end{cases}$ ' $\begin{cases} x \quad t \\ y \quad t \\ z \quad t \end{cases}$

$|z| \sqrt{\ }$

Z i z i

$ r % r & r $\sqrt{\ }$ ' r

$ ab a b % $ab \quad \frac{}{a} \quad \frac{}{b}$ & a b $\frac{ab}{}$ ' ab a b

$ f x f x z x

% f x f x x x

& PVÕ

' x x f x

D x y mz

E x ny z Ç D E

$ Y — % Y — & Y — ' Y —

Tuyensinh247.com

SA A ABC $ D D P L F % y AB BC a y F ABC

.RQ FiF P W Q J

$ $\frac{a}{}$ % $\frac{a}{}$ & $\frac{a}{}$ ' $\frac{a}{}$

RX .F Q W ABC' A B C D Fy iFF Q O m j a a a F K

ABC' A B C D Oj

$ V a % V a & V a ' V a

RX F Q J N Q J D Q W y Oxyz F R L j Q J d $\frac{x}{}$ $\frac{y}{}$ $\frac{z}{}$ y

d $\begin{cases} x & t \\ y & t \\ z & t \end{cases}$ t R . Q J W k Q D L j m Q Q r M Q "

$. Q y F N Q F Q X % Q k Q N Q y F

& 9 Q y F Q k Q N Q F Q X ' 9 D F Q X Q y F

RX R P W F y W P I Q N t Q K R 0 Q F W R D R Q O j m Q J

W F y F K S Q R F i F K d W P I Q P W Q 3

$ d $\sqrt{}$ % d $\frac{\sqrt{}}{}$ & d $\sqrt{}$ ' d $\sqrt{}$

RX R F D R V Õ f x x^x Q J

$ f x x^x x O Q % f x x^x x O Q

& f x x^x x x O' f x x^x Q

RX Q R F D R V Õ y ^{x}

$ y $\frac{^x}{OQ}$ % y ^{x} O Q & y x ^{x} ' y ^{x}

RX Q R F D k Q W Q K ORJ ORJ x Oj

$ S – $\frac{\S}{©}$ f% S – $\frac{\S}{©}$ f& S $\frac{\S}{©}$ ' S « $\frac{a}{}$

RX 0 Q W Q K a F y P Q K D k Q Q y Q D Q z Q O Q P W Q

m Q W j F D k Q Q y Q Q W Q T Q D k Q Q y Q j

$ –Sa $\sqrt{}$ % –Sa $\sqrt{}$ & Sa $\sqrt{}$ ' –Sa $\sqrt{}$

Tuyensinh247.com

Thei gian làm bài:90 phút;
(50 câu tr7c nghiOm)

0mJ

(Thí sinh không]ƒ c su dmng tài liOu)

ÑQWQK *ÑRQK*

&X 0 ÝWD]W Fy kQ.Qk kQÉQ]HQ Fy ïnQ Oj PÝDRO
a m b m c m ïnWRDQWSQ]HQ Ý QP Y
SQ WP IF FkRQ RD FF PÝQP ÃPIÊk\RD QOj
QFkRDFFOQFkWÕQRDW QWNQOj
$ QJ % QJ & QJ ' QJ

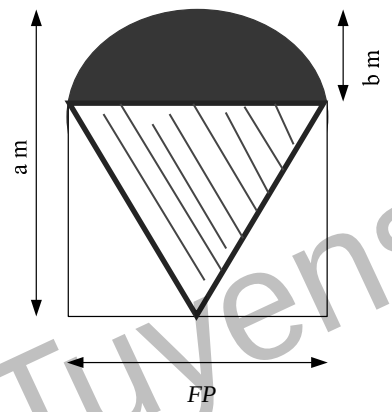

&X %QKyFiDRFyÕWK m QKi9TDFQÝ FRQ m Y
QFWKRNQRÕQiFDPu QFWÝFRQ m W
PÊRQFiQKRQWN9W SRDRQKRQFiÕQ
ïnFÒQQYDRQNQFyRÕQTX iWQQX
$ FRQ % FRQ & FRQ ' FRQ

&X Gọi z và z là hai nghiệm phức của phương trình $z \quad z$. Biểu thức $A \quad |z| \quad |z|$ có giá trị bằng

A. $\sqrt{\ }$.◎ **B.** $\sqrt{\ }$.◎ **C.** $\sqrt{\ }$.◎ **D.** $\sqrt{\ }$.◎

◎ ◎ ◎

$y \quad \frac{x}{x}$ % $y \quad \frac{x}{x}$ & $y \quad \frac{}{x}$ ' $y \quad \frac{x}{x}$

[illegible] $y \quad \frac{x \quad m}{x}$ [illegible] > (Oj

$ m % $\frac{m}{}$ & m ' $\frac{m}{}$

[illegible] a FyP[illegible] [illegible]

$ $-Sa\sqrt{}$ % $-Sa\sqrt{}$ & $Sa\sqrt{}$ ' $-Sa\sqrt{}$

[illegible] ABC A B C Fy[illegible] a√ PW [illegible] A BC [illegible]

$ $\frac{\sqrt{a}}{}$ $\frac{\sqrt{a}}{}$ & $\frac{a\sqrt{}}{}$ ' $\frac{a\sqrt{}}{}$

%

[illegible] MNPQ [illegible] M N P [illegible] Q [illegible]

$ % & '

[illegible] y f x Fy[illegible] f x [illegible]

[illegible] f x [illegible]

Fy[illegible]

FiF[illegible]

$ PD[f x f @ % PD[f x f @

& PD[f x f @ ' PD[f x f @

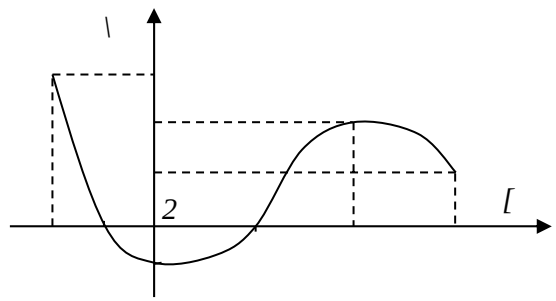

[illegible]

$ [illegible] f x [illegible] f x z [illegible] x

% [illegible] f x [illegible] f x [illegible] x x

& [illegible] PVÕ

' [illegible] x [illegible] x [illegible] f x

[illegible] F]± [illegible]

[illegible] z $\frac{i}{}$ z [illegible]

$ S_{OMN} — % S_{OMN} — & S_{OMN} — ' S_{OMN} —

[illegible] v t t PV[illegible] t O[illegible]

[illegible]

$ V % V & V ' V

[illegible] r cm [illegible] h cm Oj

$ Scm % Scm & Scm ' cm

Tuyensinh247.com

Tuyensinh247.com

Oxyz FK PWSQJ3 D[by d d K

a b c JTKZKE M N JFiFK A PWRQJOQ QW

.WW F D b / c G FQJ

$ % – & '

KX KNÕKSWFÅ S.ABCDFyj\ ABCDOJKQKFQKPQKQWK

PWFQJ KWKP FDNÕKSÿOj

$ √ % √ & √ ' √

KX K a x y! NQÏQKQVDJ\ VDL

$ ORJ$_a$ x y ORJ$_a$ xORJ$_a$ y % ORJ$_{\sqrt{a}}$ x –ORJ$_a$ x

& ORJ$_a$ x^D DORJ$_a$ x ' ORJ$_a$ $\sqrt{x}$ –ORJ$_a$ x

KX KQKWQWQKiFQKQKQKQN tQKQKQNtQK

ZDKQKWQFzQOKQKQKFPWSKy QFDPWQKQyQÕJFW

FDTWQQJPSK x SÏPWQKé DWKÕyQ

$ √ SR % √ SR & SR ' √ SR

KX KFiFVÕKkQJ a b K a z JY ORJ$_a$b ! .QÏQKQVDJKOj QJ

$ a b a « ¬ a b % a a b « ¬ a b & a b a « ¬ a b ' a a b « ¬ a b

KX KÏnQWJ ' JKKP0FyHFWFÁKkQJ $\vec{a}$

$ -x t ® y t ¯ z t % -x t ® y t ¯ z t & -x t ® y t ¯ z t ' -x t ® y t ¯ z t

KX .tK HOJKQKQKÏVÕ y $\sqrt{OQ}$ \JFQWFK V FD

NÕQDWFNKOKQK HQTQW Ox

$ V S O Q % V S OQ & V S OQ ' V S O Q

KX K f x x / x TQÈJ P f § / © f · / ¹ f § / © f · / ¹ § / © · / ¹

$ 3 % 3 —— & 3 —— ' 3

Tuyensinh247.com

ABC A B C D FyÉiFFÉQQOmÜj a a aÜÜÕ
ABC' A B C D Oj

$ V a % V a & V a ' V a

RX tQÜÜFÉDÜVÕ y x

$ y $\frac{x}{OQ}$ % y x O Q & y x x ' y x

RX ÜÜQÜÜS S.ABCFyÜOÜÜPÜÜFÜQÜFÜQÜÜW A, BC = a $\sqrt{\ }$ 0ÜÜQ SABOÜÜPÜÜF
ÜÜQÜÜPÜÜQÜÜFÜÜQÜÜR aÜÜÜ

SA A ABC SDDPIFSy AB BC a yF ABC

.RQFiFÑPSKQJ

$ $\frac{a}{}$ % $\frac{a}{}$ & $\frac{a}{}$ ' $\frac{a}{}$

RX ÑFÐSkkQWQK x – Oj

$ x % x & x ' x

RX ÑRFÐSkkQWQK ORJ ORJ x Oj

$ $S - \frac{\S}{\ddot{}}$ $f\%\frac{\cdot}{1}S - \frac{\S}{\ddot{}}$ $f\&\frac{\cdot}{1}S « \frac{a}{\neg}\frac{\cdot}{1}$ ' $S \frac{\S}{\ddot{}}\frac{\cdot}{1}$

RX RWFKQ $\int_0^{\pi} \cos^2 x.\sin x dx.$ t KOFy

$ $\int_1^1 \ddot{} t^2 dt$ % $\int_1^1 \ddot{} t^2 dt$ & $\int_0^{\pi} t^2 dt$ $\int_0^{\pi} t^2 dt$

f x x^x FQJ

$ f x x^x x O Q % f x x^x x O Q

& f x x^x x x O' f x x^x Q

RX uQÉQOÑÐRVÕR"

$ y x x

% y x x

& y x x

' y x x

RX RQNQDQÑÝ Oxyz FRÑFR $\vec{u}$ $\vec{v}$ m m m ÿÇ

$\vec{u}\ \vec{v}\ \neg\ A\ \vec{a}\ \frac{o}{¼}\ \vec{a}$

m % m & m ' m

RX ÕQÑFQFÐÑWÕ y $\frac{\sqrt{x}}{x\ [}$ Oj

$ % & '

RX RQÑÝFRÑÐ0SKQ ÑÝÑ0FKL

ÐQOmÑÑQRVDX kQJ

$ a b $\frac{ab}{}$ % ab $\frac{}{a}\ \frac{}{b}$ & ab a b ' ab a b

Â

Tuyensinh247.com

The i gian làm bài:90 phút;
(50 câu tr7c nghiOm)

0mỷ

(Thí sinh không ỷ c su dmng tài liOu)

ÑQWVQK *ÑRQQK*

ÑX PVÕRmyQÑW5"

$ y x *% y ORJ x x* *& y ORJ x* *' y x*

ÑX Gọi z và z là hai nghiệm phức của phương trình z z . Biểu thức $A |z| |z|$ có giá trị bằng

A. $\sqrt{\ }$.◎ **B.** $\sqrt{\ }$.◎ **C.** $\sqrt{\ }$.◎ **D.** $\sqrt{\ }$.◎

◎ Cme◎

◎ $y \frac{x \ ◎}{x^{◎} \ ◎}$ % $y \frac{x}{x}$ & y x ' $y \frac{x}{x}$

ÑX uQÉQOÜWDFVÕR"

$ y x x

% y x x

& y x x

' y x x

Tuyensinh247.com

ÑX $f x$ x x *TQÈJ* *P* f $\S$ © f $\cdot$ f $\S$ © f $\cdot$ $\S$ © $\cdot$

$ 3 *% 3* *& 3* *' 3*

ÑX FQNQDQFKÜ *MNPQ L M N P Q R F*
DFmQÑFyVÕQJ

$ *%* *&* *'*

ÑX FFQKyFiDRFyÜWK *m QKi9DTDFQÑW* *FRQ m*
PÊRQFiÜWKFQPN9W *SRDRQKRQFiÜW*
ÜFÙQVÑDRQÑQFyRÑQTX *iWQK*

$ FRQ *% FRQ* *& FRQ* *' FRQ*

ÑX F x 3 V dxQF [NK

$ F x FxR V *% F x FxR V* *& F x FxR V* *' F x FxR V*

P tOJVÕKQWFDFRQFzQOKWQPÝKQFD

PÝMEkVQKQW tQPKWEkW P tmçFWQKRFQK P t

KQWFRÝÊQKQNÕEFÙmKW OmQJFDFRQFzQOKWQPX̄

JÔjmWQKQLQJEFQKWQÕKW

$ QP % QP & QP ' QP

KX KRVÕ y f x FyKR f x OLQKWQ5KDJRVÕ f x KQ

JQ@JKkQKÝQ7PNQÜQKW QJFiFNQÜQKDX

$ PD[f x f
> @

% PD[f x f
> @

& PD[f x f
> @

' PD[f x f
> @

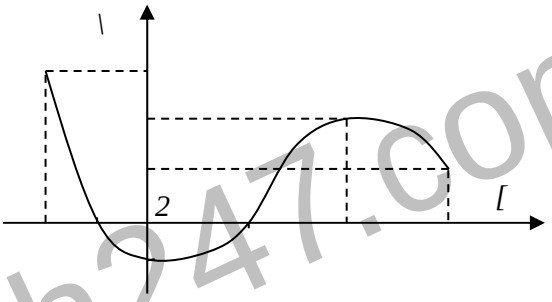

KX KQJNQJDQ KÕW ý Oxyz FK PWSQJ3 D[by c d K

a b c JTKQJ M N JFiFKQJ A PÝRQJQQKW

.JKW F $\frac{D}{c}\frac{b}{G}$ QJ

$ % — & '

KX 0ÝW Fy KQJQKkQÝQJKWHQ Fy mQÔ Oj PÝDRO

a m b m c m mKWRDQKQSQJHQPÝ QP J

SQJPFFKRWRDFFPÝQP ÕPÔFk\RDQJ

JQFkRDFFOJQFkWÕQWRDW QWNQOj

$ QJ % QJ & QJ ' QJ

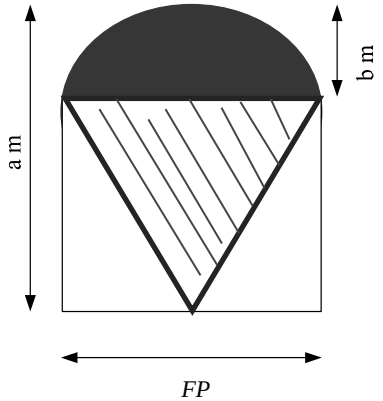

KX JSKy SA A ABC SDDPIFKy AB BC a JF ABC

.RQFiFÕPSWQJ

$ $\frac{a}{}$ % $\frac{a}{}$ & $\frac{a}{}$ ' $\frac{a}{}$

KX WKDNÕyEQNtQK r cm JFÅDR h cm Oj

$ Scm % Scm & Scm ' cm

Tuyensinh247.com

[illegible]

$ $-Sa\sqrt{\ }$ % $-Sa\sqrt{\ }$ & $Sa\sqrt{\ }$ ' $-Sa\sqrt{\ }$

[illegible] $y \sqrt{OQ}$ [illegible] V FÐ [illegible] Ox

$ V S O Q % V S OQ & V S O Q ' V S OQ

[illegible] x y z [illegible]

$ x y z % x y z

& x y z ' x y z

[illegible] $y \dfrac{FRVx}{FRVx\ m}$ [illegible]

$ $\dfrac{m\ d}{m\ t}$ % $\dfrac{m\ d}{m\ t}$ & m ! ' m

[illegible] y x x x Oj

[illegible] x • R

[illegible] f

[illegible] OE y x f OE y x f

$ % & '

[illegible] z [illegible] $w\ \dfrac{\bar{z}\ i}{z}$

$ $\sqrt{\ }$ % & $\sqrt{\ }$ '

[illegible] S.ABCFyÿOj [illegible] A, BC = a√ 0 [illegible] SABOj [illegible] S.ABC

$ $\dfrac{Sa\sqrt{\ }}{\ }$ % $\dfrac{Sa}{\ }$ & $\dfrac{Sa\sqrt{\ }}{\ }$ ' $\dfrac{Sa}{\ }$

[illegible]

$ [illegible]

% [illegible] $\sqrt{a\ b}$

& [illegible]

' [illegible] $\dfrac{-a}{b}$

[illegible] a b [illegible] a z [illegible] ORJ b ! [illegible]

$ $\dfrac{a\ b\ a}{a\ b}$ % $\dfrac{a\ a\ b}{a\ b}$ & $\dfrac{b\ a}{a\ b}$ ' $\dfrac{a\ a\ b}{a\ b}$

[illegible] S.ABCDFyÿ ABCDOj [illegible]

$ $\dfrac{\sqrt{\ }}{\ }$ % $\dfrac{\sqrt{\ }}{\ }$ & $\dfrac{\sqrt{\ }}{\ }$ ' $\dfrac{\sqrt{\ }}{\ }$

Tuyensinh247.com

$\vec{a}$

$\begin{cases} x = t \\ y = t \\ z = t \end{cases}$ % $\begin{cases} x = t \\ y = t \\ z = t \end{cases}$ & $\begin{cases} x = t \\ y = t \\ z = t \end{cases}$ ' $\begin{cases} x = t \\ y = t \\ z = t \end{cases}$

[illegible]

$ [illegible] $f(x)$ [illegible] $f(x)$ [illegible]

% [illegible] x [illegible] x [illegible] $f(x)$

& [illegible] $f(x)$ [illegible] $f(x)$ [illegible] x x

' [illegible] PVÕ

[illegible] $y = \dfrac{\sqrt{x}}{x}$ Oj

$ % & '

[illegible] ABC A B C Fy [illegible] a√ PW

SQJ A BC [illegible]

$ $\dfrac{a\sqrt{\ }}{}$ % $\dfrac{a\sqrt{\ }}{}$ & $\dfrac{\sqrt{a}}{}$ ' $\dfrac{\sqrt{a}}{}$

[illegible] F]± [illegible]

FRVÕF z $\dfrac{i}{}$ z [illegible]

$ S_{OMN} — % S_{OMN} — & S_{OMN} — ' S_{OMN} —

[illegible] a $\dfrac{S}{}$ b $\dfrac{S}{}$ [illegible]

$ $\int_a^b \dfrac{3}{FRVx}dx$ [illegible] % $\int_a^b \dfrac{3}{FRVx}dx$ [illegible]

& $\int_a^b \dfrac{3}{FRVx}dx$ [illegible] ' $\int_a^b \dfrac{3}{FRVx}dx$ [illegible]

[illegible] ABC' A B C D Fy [illegible] a a [illegible]

ABC' A B C D Oj

$ V a % V a & V a ' V a

[illegible] y^x

$ $y \dfrac{x}{OQ}$ % y^x O Q & $y x^x$ ' y^x

[illegible] z [illegible] Oj

$ [illegible] % [illegible] & [illegible] ' [illegible]

[illegible] $y \dfrac{x m}{x}$ [illegible] > (Oj

$ m % $\dfrac{m}{}$ & m ' $\dfrac{m}{}$

Tuyensinh247.com

$y \quad \frac{x \quad x}{x}$ Fy [illegible]

$y \quad ax \quad b$ [illegible] $a \quad b$ [illegible]

$ % & '

[illegible] $a \quad x \quad y!$ [illegible]

$ $ORJ_a x^D \quad DORJ_a x$ % $ORJ_{\sqrt{a}} x \quad -ORJ_a x$

& $ORJ_a x y \; ORJ_a x ORJ_a y$ ' $ORJ_a \sqrt{x} \quad -ORJ_a x$

[illegible] $|z| \quad \sqrt{\quad}$ [illegible]

$Z \quad i z \quad i$ [illegible]

$ r % r & $r \quad \sqrt{\quad}$ ' r

[illegible]

$ $\frac{\quad}{\quad}SR$ % $\frac{\sqrt{\quad}}{\quad}SR$ & $\frac{\quad}{\quad}SR$ ' $\frac{\sqrt{\quad}}{\quad}SR$

[illegible] $v \quad t$ [illegible]

$ V % V & V ' V

[illegible] $D \quad x \quad y \quad mz$ [illegible]

$E \quad x \quad ny \quad z$ Ç D [illegible]

$ $Y \quad -$ % $Y \quad -$ & $Y \quad -$ ' $Y \quad -$

[illegible] $\int_0^{\pi} \cos^2 x.\sin x dx.$ [illegible]

$ $\int_0^{\pi} t^2 dt$ $\int_1^{1} t^2 dt$ & $\int_1^{1} t^2 dt$ ' $\int_0^{\pi} t^2 dt$

[illegible] $x \quad -Oj \; \pi \quad \pi$

$ x % x & x ' x

[illegible] $ORJ \; ORJ \quad x$ [illegible]

$ $S \quad - \; \frac{\S}{©} \quad f\%_1 \; S \quad - \; \frac{\S}{©} \quad f\&_1 \; S \; « \; -\frac{a}{\neg} \quad 1 \quad ' \; S \quad -\frac{\S}{©} \quad 1$

Tuyensinh247.com

Oxyz [illegible] $\vec{u}$ $\vec{v}$ *m m* *m* [illegible]

$\vec{u}\ \vec{v}$ [illegible] *A* $\vec{a}$ [illegible] $\vec{a}$

m % *m* & *m* ' *m*

[illegible] $f\ x\ \ x^x$ [illegible]

$ $f\ x\ \ x^x\ \ x$ [illegible] *O* [illegible] *Q* % $f\ x\ \ x^x\ \ x$ [illegible] *O* [illegible] *Q*

& $f\ x\ \ x^x\ \ x\ \ x$ [illegible] *O'* $f\ x\ \ x^x$ *Q*

[illegible] $\frac{x}{x\ \ m}$ [illegible] *A* [illegible] *C* [illegible] *mt* [illegible] (d) [illegible]

[illegible] *B* , *DVDRF* [illegible] *ABCDO* [illegible]

A. *m* **B.** *m* **C.** *m* [illegible] *m* **D.** *m* [illegible]

[illegible] *Oxyz* [illegible] *d* $\frac{x}{\ }$ $\frac{y}{\ }$ $\frac{z}{\ }$ [illegible]

$d\ \begin{cases} x\ \ t \\ y\ \ t\ \ t \\ z\ \ t \end{cases}$ [illegible]

$ 9DF [illegible] % [illegible]

& 9 [illegible] ' [illegible]

[illegible] *a b* $\frac{ab}{\ }$ % $ab\ \ \frac{\ }{a}\ \ \frac{\ }{b}$ & $ab\ \ a\ \ b$ ' $ab\ \ a\ \ b$

[illegible]

$ $d\ \ \sqrt{\ }$ % $d\ \ \frac{\sqrt{\ }}{\ }$ & $d\ \ \sqrt{\ }$ ' $d\ \ \sqrt{\ }$

[illegible] *y* $f\ x$ [illegible]

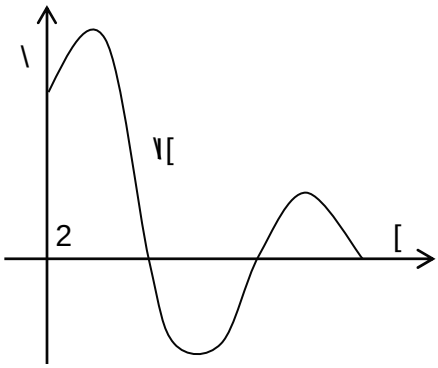

$ $\int_0^6 f(x)dx$ % $\int_0^3 f(x)dx$

& $\int_2^6 f(x)dx$ ' $\int_0^2 f(x)dx$

[illegible]

Tuyensinh247.com

The i gian làm bài:90 phút;
(50 câu tr7c nghiOm)

0mJ

(Thí sinh không]a c su dmg tài liOu)

ÑQWVQK ÑRQQK

RX RQJNQJDQ KÑW ý Oxyz FR PWSQJ3 D[by d d K
a b c JTKQE M N YFiFKQ A PWRQOQQW
.YKW F D b / c G QJ

$ – % & '

RX RKQKS S.ABCFyYOJPIFQJFkQW A, BC = a √ 0WQ SABOJPIF
JQPWQPWQJFJQWR aWNÑQRÑKQKS S.ABC

$ Sa / % Sa / & Sa √ / ' Sa √ /

RX RWFKQ $\int_0^{\pi} \cos^2 x.\sin x dx.$ *t KOFy*

$ $\int_0^{\pi} t^2 dt$ $\int_1^{1} t^2 dt$ $\int_1^{1} t^2 dt$ $\int_0^{\pi} t^2 dt$

& '

HOJKQKQKWÕ y √OQ \JWQKK V FD
NÑQRDYWFNKQKK HQTDQW Ox

$ V S O Q % V S OQ & V S OQ ' V S O Q

RX RQJNQJDQ KÑW ý Oxyz FR KQJnQJ d x / y / z / Y

d x t
® y t t R •ÑQJWkQJDDKJnQQrKQ"
z t

$ 9DFQKQJF % QKQKnQNQJF
& 9QJFQKnQNQFQKX ' QQJFJNQFQKX

RX RQJNQJDQJFRÑ MNPQ K L M N P Y Q R F
DKJnQQJyVÑQJ

$ % & '

RX RFiFVÑnkQJ a b K a z Y ORJb ! .QJQKRVDYOj QJ

a a b a a b a b a
« a b % « a b & « a b ' « a b
¬ ¬ ¬ ¬

$

Tuyensinh247.com

a m b m c m

$ QJ % QJ & QJ ' QJ

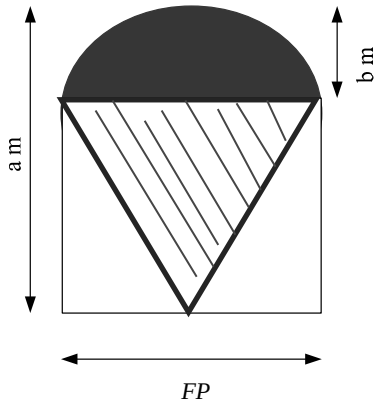

$ y x x % y x x

& y x x ' y x x

$ y x % y x & y x ' y x

SA A ABC AB BC a ABC

$ a % a & a ' a

y x

$ y x x % y x & y x ' y x O Q

x y z

$ x y z % x y z

& x y z ' x y z

Oxyz u v m m m

u v A a a

m % m & m ' m

y f x f x f x

$ PD[f x f

% PD[f x f

& PD[f x f

' PD[f x f

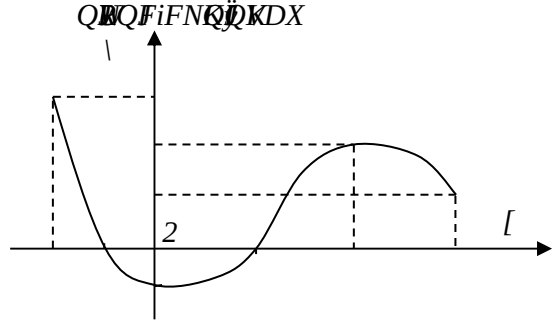

Tuyensinh247.com

F x 3 dx F NJK

$ F x FxR V % F x FxR V & F x FxR V ' F x FxR V

RX %EQKyFiDRFyÊWK m QKi9ÊTDHFQRÝ FRQ m
PuQKFKRÝFRQ m
HFSKDRQKKRQFiÕÇ
TWQK

$ FRQ % FRQ & FRQ ' FRQ

RX RÊ a x y! NÊQÊRVDJ\ VDL

$ ORJ x^D DORJ x % ORJ x y ORJ xORJ y

& ORJ √x −ORJ x ' ORJ √x −ORJ x

RX 0ÝÊDQFÊÕPVKQmDiJW SÊQÊÝÝW
FÊÝFÊQÊÕ v t t PVÊQÝ t OJNÊQÊVQQJ
FTXQJmQPtKQÊRQÊ\
FRÊFÝÊQ"

$ V % V & V ' V

RX ÚPPÊÝÊ VDÊKQFiFPÊÝÊDX

$ ÕKF]DEyVÕKF]DE

% ÕKF]DEyPÊÝQj √a b

& ÕKF]DEÝÊÝÊ0DÊKQPW QSKF]

' ÕKF]DE æ -a ® b

RX RVÕKF z iÚQÊÝQFÊVÕKF w z̄ i / z

$ % √ & √ '

RX RDÊFiFVÊÝÊPmQ a S/ b S/ 0ÊÝÊRVDÝÝQJ

$ ∫_a^b 3/FRVx dx LQb LQa % ∫_a^b 3/FRVx dx /FRV /FRV

& ∫_a^b 3/FRVx dx /FRV /FRV ' ∫_a^b 3/FRVx dx LQa LQb

RX RÊNÊÝKSWFÝÊ S.ABCDFyÝ\ ABCDOJKQÊÝFÝQKPÊÝKQÊÝÝ
PÝFÊQJ FÊNÊÝKSÝOj

$ √/ % √/ & √/ ' √/

RX RmQÊÝJ ' JÊÝÊ0JFyÝHFWFÊÝkQJ a

$ -x t % -x t & -x t ' -x t
® y t ® y t ® y t ® y t
¯ z t ¯ z t ¯ z t ¯ z t

RX RÊOQÊÝQJ ABC A B C FyÝÊÝÊÝPÊFÊÝÊÝ% a√ PW
SÊQJ A BC FÊÝÊÝÊÝF ÊQÊÝKÊÝQÊÝW

$ √a/ % a√/ & a√/ ' √a/

Tuyensinh247.com

Tuyensinh247.com

$z \quad \frac{i}{\quad} z$

$\$ \; S_{OMN} \; — \qquad \% \; S_{OMN} \; — \qquad \& \; S_{OMN} \; — \qquad ' \; S_{OMN} \; —$

$|z| \quad \sqrt{\quad}$

$Z \quad i \; z \quad i$

$\$ \; r \qquad \% \; r \qquad \& \; r \quad \sqrt{\quad} \qquad ' \; r$

Gọi z và z là hai nghiệm phức của phương trình $z \quad z$. Biểu thức $A \quad |z| \quad |z|$ có giá trị bằng

A. $\sqrt{\quad}$ **B.** $\sqrt{\quad}$ **C.** $\sqrt{\quad}$ **D.** $\sqrt{\quad}$

$x \quad y \quad mz$

$E \quad x \quad ny \quad z \qquad Ç \qquad D$

$\$ \; Y \quad — \qquad \% \; Y \quad — \qquad \& \; Y \quad — \qquad ' \; Y \quad —$

$ABC' \; A \; B \; C \; D$ $a \quad a \quad a$

$ABC' \; A \; B \; C \; D$

$\$ \; V \quad a \qquad \% \; V \quad a \qquad \& \; V \quad a \qquad ' \; V \quad a$

a

$\$ \; -Sa \sqrt{\quad} \qquad \% \; -Sa \sqrt{\quad} \qquad \& \; Sa \sqrt{\quad} \qquad ' \; -Sa \sqrt{\quad}$

$P \; t$ $\frac{t}{\quad}$ $P \; t$

$P \; t$

$\$ \; QP \qquad \% \; QP \qquad \& \; QP \qquad ' \; QP$

$y \quad \frac{x \quad m}{x} \qquad > \; (Oj$

$\$ \; m \qquad \% \; \frac{m}{\quad} \qquad \& \; m \qquad ' \; \frac{m}{\quad}$

$y \quad \frac{x \quad x}{x}$

$y \quad ax \quad b$ $a \quad b$

$\$ \qquad \% \qquad \& \qquad '$

z

$\$ \; Y \qquad \% \; Y \qquad \& \; Y \qquad ' \; Y$

$\$ \; y \quad {}^{x} \qquad \% \; y \quad ORJ \; x \qquad \& \; y \quad \frac{\quad}{x} \qquad ' \; y \quad ORJ \; x \quad x$

x S ÿPHQQKDWNÕyQ

$ —SR % —SR & —SR ' —SR

&X ZQÑFÐSkQWQK ORJ ORJ x Oj

$ S – f% S – f& S « – ' S –

&X 0ÑQRVDXQJ

$ PVÕ

% f x PVÕ f x x

& x OÑFÐSkQWQK f x

' f x z x

&X r cm FÅDR h cm Oj

$ Scm % Scm & Scm ' cm

&X QÑFÐWVÕ y Oj

$ % & '

&X ÿPHiFÑDPVÕ mÑVÕ y QÑQNRQJ

$ m d % m & m d ' m !

&X ÑFÐSkQWQK x – Oj

$ x x & x ' x

%

&X & f x TQÑJ P f f f f

$ 3 % 3 & 3 ' 3

&X \ Y A C ÿP mÑQJ (d) \ FÑW

ÑSkQÑ B , DVDRFÑF ABCDOÑQKL

A. m **B.** m **C.** m RF m **D.** m –

Tuyensinh247.com

$f\ x\quad x^x$ [illegible]

$ f x x^x x O Q

% f x x^x x x O Q

& f x x^x

' f x x^x x O Q

[illegible]

$ a b $\frac{ab}{}$

% $ab\ \frac{}{a}\ \frac{}{b}$

& ab a b

' ab a b

[illegible]

$ d $\sqrt{}$

% d $\frac{\sqrt{}}{}$

& d $\sqrt{}$

' d $\sqrt{}$

[illegible]

y x x x Oj

[illegible] x • R

[illegible] f

[illegible]

[illegible] $OP_{x\phi}$ y x $f_{\phi\ x}$ OP y x f

$

%

&

'

[illegible] y f x [illegible]

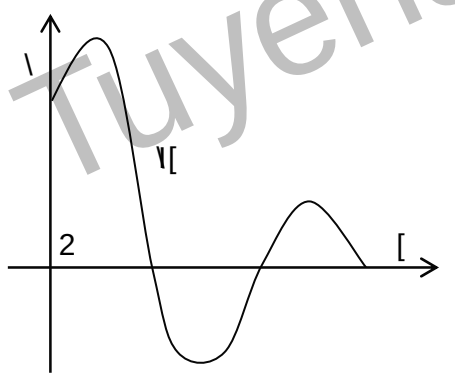

$ $\int_0^2 f(x)dx$

% $\int_0^3 f(x)dx$

& $\int_0^6 f(x)dx$

' $\int_2^6 f(x)dx$

Tuyensinh247.com

The i gian làm bài:90 phút;
(50 câu tr7c nghiOm)

0mÅW

(Thí sinh không ÿ c su dmng tài liOu)

ÑQWLQK *ÑRLQK*

&X .t ÑK HOÿkQKQQÿKVÕ y √OQ \ÿWQÿWK V FÐ
NÑQRDÿWÿFNKOkQK HQTÐQW Ox
$ V S O Q % V S OQ & V S OQ ' V S O Q

&X &NÑKÿSWFÿÅ S.ABCDFyÿ\ ABCDOÿkQQF4QKPQKQWÿK
PÿWFÐQJ ÿWKP FÐNÑKÿSÿOj

$ √ % √ & √ ' √

&X &VSÑKF z iÐQRÐQFÐVSÑKF w z i / z

$ √ % √ & '

&X uQÑQOÿWÐRVÕR"
$ y x x
% y x x
& y x x
' y x x

&X PQÑÿFKOÐ01SKQ ÿÿÿ00FWL
ÐQOmÿÿÿQRVDX ÿÿQJ

$ ab a b % ab a b & a b ab ab a b ab a b

&X ÐRFÐRVÕ f x x^x ÐQJ

$ f x x^x x O Q % f x x^x x O Q

& f x x^x x x O' f x x^x Q

&X ÐQRFÐRVÕ y x^x

$ y x^x % y x^x & y x^x O Q ' y x^x / OQ

Tuyensinh247.com

a m b m c m

$ QJ % QJ & QJ ' QJ

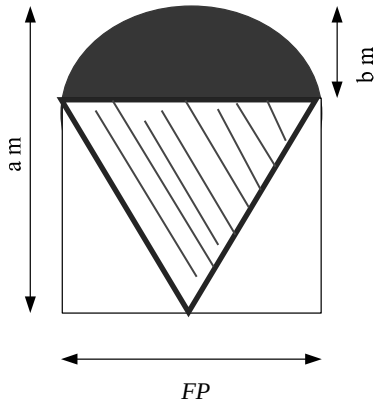

y f x

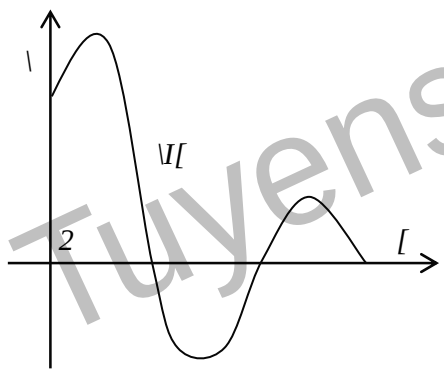

$ $\int_{2}^{6} f(x)dx$ % $\int_{0}^{6} f(x)dx$ & $\int_{0}^{3} f(x)dx$ ' $\int_{0}^{2} f(x)dx$

y

$ % & '

ORJ ORJ x Oj

$ $S = \int_{1}^{0} f(x)dx$ % $S = \int_{1}^{0} f(x)dx$ & $S = \int_{1}^{a} f(x)dx$ ' $S = \int_{1}^{0} f(x)dx$

$|z| = \sqrt{\ }$

Z i z i

$ r % r $\sqrt{\ }$ & r ' r

y!

$ $ORJ_a \sqrt{x} = ORJ_a x$ % $ORJ_a x^D = DORJ_a x$

& $ORJ_a x y = ORJ_a x + ORJ_a y$ ' $ORJ_{\sqrt{a}} x = ORJ_a x$

z

Tuyensinh247.com

$y \quad \frac{x}{x}$ % $y \quad \frac{}{x}$ & $y \quad \frac{x}{x}$ ' $y \quad \frac{x}{x}$

[illegible] $y \quad \frac{FRVx}{FRVx \quad m}$ [illegible]

$ m ! % $m \quad d$ & m ' $m \quad d$

[illegible]

$ $-Sa\sqrt{}$ % $-Sa\sqrt{}$ & $Sa\sqrt{}$ ' $-Sa\sqrt{}$

[illegible] Gọi z và z là hai nghiệm phức của phương trình $z \quad z$. Biểu thức $A \quad |z| \quad |z|$ có giá trị bằng

A. $\sqrt{}$. **B.** $\sqrt{}$. **C.** $\sqrt{}$. **D.** $\sqrt{}$.

[illegible] $a \; b$ [illegible] $a \; z$ [illegible] $ORJ b$! [illegible]

$ $a \quad a \; b$ % $a \quad b \quad a$ & $a \quad b \; a$ ' $a \quad a \; b$

[illegible] $Oxyz$ [illegible] $d \quad \frac{x}{} \quad \frac{y}{} \quad \frac{z}{}$ [illegible]

$d \begin{cases} x \quad t \\ y \quad t \\ z \quad t \end{cases}$ [illegible]

$ [illegible] % [illegible]
& [illegible] ' [illegible]

[illegible] $x \quad -Oj$

$ x x & x ' x
%

[illegible] $x \quad y \quad z$ [illegible]

$ $x \quad y \quad z$ % $x \quad y \quad z$

& $x \quad y \quad z$ ' $x \quad y \quad z$

[illegible] $y \quad f \; x$ [illegible] $f \; x$ [illegible] $f \; x$ [illegible]

$ PD[$f \; x \quad f$ [illegible]

% PD[$f \; x \quad f$ [illegible]

& PD[$f \; x \quad f$ [illegible]

' PD[$f \; x \quad f$ [illegible]

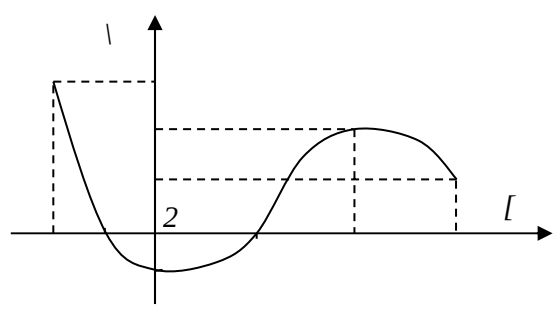

Tuyensinh247.com

y x % y x & y x ' y ORJ x x

[illegible]

$ [illegible] a b

% [illegible]

& [illegible] $\sqrt{a \quad b}$

' [illegible]

[illegible]

$ [illegible] % [illegible] & [illegible] ' [illegible]

[illegible] Oxyz [illegible] D[by d d [illegible]

a b c [illegible] M N [illegible] A [illegible]

[illegible] F $\frac{D \quad b}{c \quad G}$ [illegible]

$ % – & '

[illegible] a $\frac{S}{}$ b $\frac{S}{}$ [illegible]

$ $\int_a^b$ 3 $\frac{}{FRVx}$ dx [illegible] % $\int_a^b$ 3 $\frac{}{FRVx}$ dx [illegible]

& $\int_a^b$ 3 $\frac{}{FRVx}$ dx [illegible] ' $\int_a^b$ 3 $\frac{}{FRVx}$ dx [illegible]

[illegible] D x y mz [illegible]

E x ny z Ç D VRQ [illegible] E [illegible]

$ Y – % Y – & Y – ' Y –

[illegible] v t t PVR [illegible] t O [illegible]

[illegible]

$ V % V & V ' V

Tuyensinh247.com

Tuyensinh247.com

$z = \frac{i}{z}$

S_{OMN} — S_{OMN} — S_{OMN} — S_{OMN} —

$y = \frac{x - m}{x}$

m $\frac{m}{}$ $\frac{m}{}$ m

$F(x) = 3 - V$

$F(x) = FxR - V$ $F(x) = FxR - V$ $F(x) = FxR - V$ $F(x) = FxR - V$

$y = \frac{x - x}{x}$

$y = ax + b$

ABC A B C $a\sqrt{}$

A BC

$\frac{\sqrt{a}}{}$ $\frac{a\sqrt{}}{}$ $\frac{\sqrt{a}}{}$ $\frac{a\sqrt{}}{}$

$f(x) = x$ $f(x) = x$

x x

$f(x) = x$ $f(x) = x$

x

$S.ABC$ $A, BC = a\sqrt{}$ $SABO$ $S.ABC$

$\frac{Sa}{}$ $\frac{Sa\sqrt{}}{}$ $\frac{Sa}{}$ $\frac{Sa\sqrt{}}{}$

$y = \frac{x}{x - m}$ A C m (d)

B, $ABCD$

A. m **B.** m **C.** m **D.** m $-$

$\vec{a}$

$\begin{cases} x = t \\ y = t \\ z = t \end{cases}$ $\begin{cases} x = t \\ y = t \\ z = t \end{cases}$ $\begin{cases} x = t \\ y = t \\ z = t \end{cases}$ $\begin{cases} x = t \\ y = t \\ z = t \end{cases}$

m FRQ m

FRQ m

FRQ FRQ FRQ FRQ

y x x x Oj

x • R

f

OP y x f OP y x f

$ % & '

f x f P f f f

$ 3 % 3 & 3 ' 3

d d d d

$ % & '

$ % & '

SA A ABC AB BC a ABC

$ % & '

ABC' A B C D a a

ABC' A B C D Oj

$ V a % V a & V a ' V a

$ % & '

$ QP % QP & QP ' QP

Oxyz

m m m m

m % m & m ' m

r cm h cm Oj

$ Scm % Scm & Scm ' cm

Tuyensinh247.com

The i gian làm bài:90 phút;
(50 câu tr7c nghiOm)

0mÂW

(Thí sinh không ÿ c su dmng tài liOu)

ÑQWQK ÑRQQK

RX RQPSWQÑÔOÿÉFRVÕK F]± iOÿÉ

FRVÕF z —— i z TQÙWKPIF01

$ S, OMN — % S, OMN — & S, OMN — ' S, OMN —

RX 0 ÝWD yW Fy KQÙQK KQÉÙ yÙHQ Fy ïnQÅ Oj PÝDRO

a m b m c m ïnWRDÙQSÙyÙHQÉÝ QP Y

SQ WP IF FFkRWRD FF PÝQP ÃPIFkRDÙQOj

QFkRDFFOÙFkWÕWRDW ÙWKQOj

$ ÙQJ % ÙQJ & ÙQJ ' ÙQJ

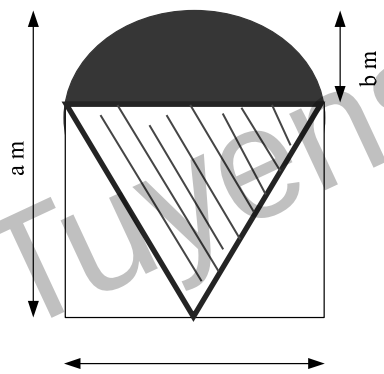

RX RDDFiFVÕÝPmQ a S — b S — 0ÙÅRVDÙQJ

$ 3 b a ——— FRVx dx DVQa DVQb % 3 b a ——— FRVx dx DVQb DVQa

& 3 b a ——— FRVx dx ——— FRVb ——— FRVa ' 3 b a ——— FRVx dx ——— FRVa ——— FRVb

RX & a x y! NÙQÙRVDÙ\ VDL

$ ORJa √x —ORJa x % ORJa x^D DORJa x

& ORJa x y ORJ a xORJ a y ' ORJ√a x —ORJa x

RX RWFKQ I π cos² x.sin xdx. t KDFy

0

$ I 1 ¨ t²dt % I 1 ¨ t²dt & I π 0 t²dt I π 0 t²dt

Tuyensinh247.com

S.ABCDFyÿ\ ABCDOjKQKJFQKPKQKWK
PÝFQJ KFKP FDNÕKSÿOj

$ $\sqrt{\ }$ % $\sqrt{\ }$ & $\sqrt{\ }$ ' $\sqrt{\ }$

KX KFiF VÕKF KÝPmQ $|z|$ $\sqrt{\ }$ ÕQJMKFiF FÝQ FiF VÕKF
Z i z i OPÝQWQTQKQNtQKDÿmQWQÿ

$ r $\sqrt{\ }$ % r & r ' r

KX TQKKFFDJRVÕ y ^{x}

$ y ^{x} % y $\frac{^{x}}{OQ}$ & y ^{x} O Q ' y x ^{x}

KX TPPÖÅK VDKQJFiFPÖÅKDX

$ ÕKF]DEyPKQOj $\sqrt{a\ \ b}$
% ÕKF]DEÝÇÝÇÝÇ0DKQPW KQSKFÇ
& ÕKF]DE œ $\frac{-a}{b}$
' ÕKF]DEyVÕKFÕDE

KX KDJRVÕRÇÝNKJFyÝFÇQQJDQJ

$ y $\frac{x}{x}$ % y $\frac{x}{x}$ & y $\frac{\ }{x}$ ' y $\frac{x}{x}$

KX KFFDSKkQKQK ^{x} – Oj

$ x x & x ' x
%

KX TQÝKQÝÖKDJRVÕR"
$ y x x
% y x x
& y x x
' y x x

KX KQJNKJDQ KÕKÝ Oxyz FK PXSKQB
D[by c d K a b c zL TK KL KÇ
M N JFiFKÇ A PÝRKQJDKQKK

ÿKÝ F $\frac{D\ \ b}{c\ \ G}$ ÇQJ

$ – % & '

KX KQÕÝFRKÇ0SKQ ÝÝÝ0FKL
KQOmÝÝKQRVDX kÇQJ

$ a b $\frac{ab}{\ }$ % ab a b & ab a b ' ab $\frac{\ }{a}$ $\frac{\ }{b}$

KX TPKFiFÝÝDKPVÕ mÇRVÕ y $\frac{FRVx}{FRVx\ \ m}$ QÝÇÝQNKQJ $\frac{S§}{\ }$ ©

$ m ! % ^{a} m d « ¬ m t & m ' ^{a}m d « ¬m t

Tuyensinh247.com

x Oj!

$ S § ¨ © ¸ ¹ % S – § ¨ © ¸ ¹ f& S – § ¨ © ¸ ¹ f' S « – a ¬ ¸ ¹

[illegible] PVÕ [illegible] 5"

$ y ORJ x % y x & y x ' y ORJ x x

[illegible] VÕ y x x x Fy [illegible] Fy [illegible]

y ax b [illegible] a b [illegible]

$ % & '

[illegible] VÕ y f x Fy [illegible]

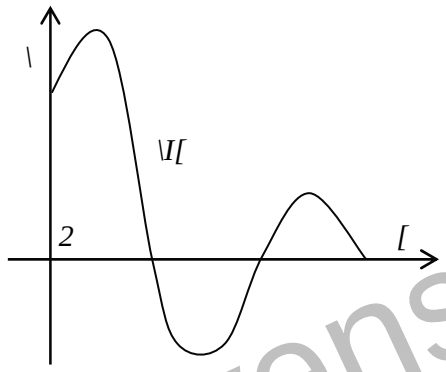

$ 2 ¨ 0 f(x)dx % 3 ¨ 0 f(x)dx & 6 ¨ 0 f(x)dx ' 6 ¨ 2 f(x)dx

[illegible] \ x x m [illegible] A C [illegible] mg [illegible] (d) \F [illegible]

[illegible] B , DVDRFR [illegible] ABCDO [illegible]

A. m – **B.** m [illegible] m **C.** m **D.** m

[illegible] F x 3 V dx F [[illegible]

$ F x FxR V % F x FxR V & F x FxR V ' F x FxR V

[illegible]

$ [illegible] PVÕ

% [illegible] f x [illegible] VÕ f x [illegible] x x

& [illegible] f x [illegible] f x z [illegible] VÕ [illegible] x

' [illegible] x [illegible] VÕ x [illegible] f x

[illegible] MNPQ [illegible] M N P [illegible] Q [illegible]

$ % & '

Tuyensinh247.com

y f x FyÿÿF f x OLQÿÿÿ

ABC A B C Fy a PW

SQJ A BC

$ $\frac{\sqrt{a}}{}$ % $\frac{a\sqrt{}}{}$ & $\frac{\sqrt{a}}{}$ ' $\frac{a\sqrt{}}{}$

Gọi z và z là hai nghiệm phức của phương trình z z . Biểu thức A $|z|$ $|z|$ có giá trị bằng

A. $\sqrt{}$.◎ **B.** $\sqrt{}$.◎ **C.** $\sqrt{}$.◎ **D.** $\sqrt{}$.◎

S.ABCFy A, BC = $a\sqrt{}$ 0 SABOJ S.ABC

$ $\frac{Sa}{}$ % $\frac{Sa\sqrt{}}{}$ & $\frac{Sa}{}$ ' $\frac{Sa\sqrt{}}{}$

f x $\frac{x}{x}$ P f f f f

$ 3 % 3 & 3 ' 3

.t HO y $\sqrt{OQ}$ V FD Ox

$ V S OQ % V S O Q & V S OQ ' V S O Q

0 a Fy

$ $-Sa\sqrt{}$ % $-Sa\sqrt{}$ & $Sa\sqrt{}$ ' $-Sa\sqrt{}$

y x x x Oj

x • R

f

OP y x f OP y x f

$ % & '

IJQNtQK R 0 d

$ d $\sqrt{}$ % d $\frac{\sqrt{}}{}$ & d $\sqrt{}$ ' d $\sqrt{}$

a b a z Y ORJ b ! .

$ $\frac{a}{\neg}$ $\frac{b}{a\ b}$ % $\frac{a}{\neg}$ $\frac{a\ b}{a\ b}$ & $\frac{a}{\neg}$ $\frac{a\ b}{a\ \ b}$ ' $\frac{a}{\neg}$ $\frac{b\ a}{a\ \ b}$

z i w $\frac{\bar{z}\ \ i}{z}$

$ $\sqrt{}$ % $\sqrt{}$ & '

SA A ABC S D P LF y AB BC a $\widehat{ABC}$

$ $\frac{a}{}$ % $\frac{a}{}$ & $\frac{a}{}$ ' $\frac{a}{}$

Tuyensinh247.com

x S ÜPÜÜQQÜÜ DÜÜÜÜÜyQ

$ $\frac{\sqrt{\ }}{\ }$SR % $\frac{\sqrt{\ }}{\ }$SR & —SR ' $\frac{\sqrt{\ }}{\ }$SR

ABC' A B C D FyÜÜiFFÜÜQQOmÜÜj a a aÜÜÜÜÜ
ABC' A B C D Oj

$ V a % V a & V a ' V a

mÜÜÜÜÜ

135	1	C	213	1	D	358	1	C	486	1	B
135	2	C	213	2	D	358	2	D	486	2	C
135	3	B	213	3	A	358	3	C	486	3	B
135	4	A	213	4	B	358	4	B	486	4	C
135	5	B	213	5	D	358	5	B	486	5	C
135	6	C	213	6	D	358	6	D	486	6	C
135	7	B	213	7	D	358	7	B	486	7	C
135	8	C	213	8	B	358	8	B	486	8	D
135	9	D	213	9	B	358	9	A	486	9	C
135	10	B	213	10	A	358	10	A	486	10	D
135	11	D	213	11	A	358	11	D	486	11	A
135	12	D	213	12	B	358	12	A	486	12	C
135	13	A	213	13	C	358	13	A	486	13	A
135	14	B	213	14	D	358	14	A	486	14	A
135	15	D	213	15	A	358	15	A	486	15	D
135	16	A	213	16	D	358	16	C	486	16	B
135	17	C	213	17	D	358	17	B	486	17	B
135	18	B	213	18	D	358	18	D	486	18	D
135	19	A	213	19	D	358	19	D	486	19	C
135	20	D	213	20	C	358	20	D	486	20	A
135	21	D	213	21	A	358	21	C	486	21	C
135	22	C	213	22	C	358	22	B	486	22	A
135	23	D	213	23	C	358	23	C	486	23	D
135	24	C	213	24	C	358	24	C	486	24	D
135	25	A	213	25	C	358	25	D	486	25	D
135	26	B	213	26	A	358	26	B	486	26	A
135	27	C	213	27	D	358	27	A	486	27	D
135	28	A	213	28	B	358	28	D	486	28	D
135	29	A	213	29	B	358	29	D	486	29	B
135	30	D	213	30	A	358	30	C	486	30	A
135	31	A	213	31	C	358	31	C	486	31	B
135	32	C	213	32	B	358	32	B	486	32	B
135	33	A	213	33	B	358	33	B	486	33	C
135	34	B	213	34	B	358	34	A	486	34	B
135	35	D	213	35	A	358	35	C	486	35	B
135	36	A	213	36	C	358	36	D	486	36	B
135	37	A	213	37	A	358	37	A	486	37	D
135	38	A	213	38	D	358	38	D	486	38	B
135	39	D	213	39	D	358	39	C	486	39	A
135	40	D	213	40	C	358	40	C	486	40	B
135	41	C	213	41	A	358	41	B	486	41	C
135	42	B	213	42	B	358	42	A	486	42	C
135	43	D	213	43	C	358	43	C	486	43	D
135	44	C	213	44	B	358	44	D	486	44	D
135	45	B	213	45	D	358	45	B	486	45	A
135	46	D	213	46	C	358	46	A	486	46	D
135	47	C	213	47	A	358	47	C	486	47	A
135	48	A	213	48	B	358	48	D	486	48	A
135	49	B	213	49	C	358	49	D	486	49	A
135	50	A	213	50	B	358	50	A	486	50	D

Tuyensinh247.com

567	1	B	640	1	C	709	1	B	894	1	B
567	2	C	640	2	A	709	2	B	894	2	A
567	3	C	640	3	D	709	3	B	894	3	B
567	4	C	640	4	A	709	4	D	894	4	D
567	5	A	640	5	A	709	5	C	894	5	A
567	6	C	640	6	D	709	6	A	894	6	B
567	7	B	640	7	B	709	7	C	894	7	D
567	8	C	640	8	D	709	8	A	894	8	C
567	9	D	640	9	A	709	9	D	894	9	D
567	10	A	640	10	B	709	10	D	894	10	B
567	11	D	640	11	A	709	11	D	894	11	C
567	12	D	640	12	B	709	12	A	894	12	C
567	13	B	640	13	B	709	13	D	894	13	B
567	14	A	640	14	D	709	14	B	894	14	A
567	15	D	640	15	C	709	15	C	894	15	C
567	16	B	640	16	B	709	16	C	894	16	A
567	17	A	640	17	C	709	17	A	894	17	D
567	18	D	640	18	C	709	18	C	894	18	C
567	19	D	640	19	D	709	19	A	894	19	A
567	20	A	640	20	A	709	20	B	894	20	A
567	21	C	640	21	C	709	21	C	894	21	D
567	22	A	640	22	C	709	22	A	894	22	C
567	23	C	640	23	D	709	23	C	894	23	B
567	24	D	640	24	C	709	24	D	894	24	B
567	25	A	640	25	D	709	25	D	894	25	C
567	26	B	640	26	B	709	26	D	894	26	D
567	27	B	640	27	C	709	27	C	894	27	A
567	28	B	640	28	C	709	28	D	894	28	B
567	29	B	640	29	B	709	29	B	894	29	C
567	30	B	640	30	C	709	30	C	894	30	C
567	31	A	640	31	D	709	31	B	894	31	A
567	32	D	640	32	B	709	32	B	894	32	D
567	33	B	640	33	D	709	33	A	894	33	A
567	34	B	640	34	B	709	34	A	894	34	A
567	35	C	640	35	B	709	35	A	894	35	A
567	36	D	640	36	D	709	36	C	894	36	D
567	37	B	640	37	D	709	37	B	894	37	D
567	38	D	640	38	D	709	38	D	894	38	C
567	39	D	640	39	C	709	39	C	894	39	B
567	40	C	640	40	C	709	40	A	894	40	C
567	41	A	640	41	A	709	41	C	894	41	A
567	42	B	640	42	A	709	42	A	894	42	B
567	43	C	640	43	A	709	43	A	894	43	B
567	44	A	640	44	A	709	44	A	894	44	C
567	45	D	640	45	A	709	45	C	894	45	B
567	46	D	640	46	B	709	46	D	894	46	B
567	47	A	640	47	A	709	47	B	894	47	D
567	48	A	640	48	C	709	48	B	894	48	D
567	49	C	640	49	A	709	49	D	894	49	D
567	50	A	640	50	C	709	50	A	894	50	C

Tuyensinh247.com

Tuyensinh247.com